SenSiFi PRODUCT BRIEF

REDPINE SIGNALS®

Expanding Wireless Horizons

RS9110-N-11-31

802.11n Wi-Fi Sensor Networking Module

The SenSiFi™ module, designated as RS9110-N-11-31, is a complete IEEE 802.11bgn client device that forms the core of Wi-Fi sensor networking devices.The module, which is certified for the Cisco Compliant Extensions program's Tag specifications v1, includes all the functionality required to implement wireless applications without the need of an external processor, offering a complete foundation for building sensor applications. It is able to collect a full range of telemetry information -- including temperature, humidity, motion, light, pressure, location, and battery level – through standard analog and digital sensor interfaces. Its on-board ultra low power microcontroller implements a small, embedded operating system on which multiple applications can be built. The fully self-contained module includes standards-compliant WLAN functionality with WPA2 security, a network stack that terminates TCP/IP and UDP connections with IPv6 capability, and configuration capability through UART or wireless. The module also includes a built-in antenna, frequency reference, power management, and flashed-in firmware. The module is available in an easy-to-assemble 31mm x 44mm LGA package.

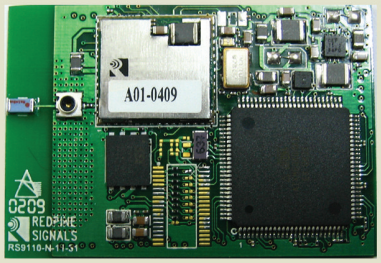

Main Features

- Ultra low power 802.11b/g/n Wi-Fi Sensor Node
- Compliant to 802.11b/g and single stream draft 802.11n
- Includes all the protocol and configuration functions required for WLAN connectivity in open and WPA/WPA2-PSK secure modes of operation
- Supports automatic roaming, advanced power save modes, and 802.11n aggregation
- Includes an ultra low power microcontroller for applications and network protocol support
- Standard real-time OS for ease of application support
- Real-time clock for wake-up scheduling and time-stamping
- Terminates TCP/IP and UDP connections with IPv6 capability
- Digital and analog interfaces to external sensors – including tempera ture, humidity, motion, current, acceleration, and pressure sensors
- Operates directly off a 2.4 V to 3.6 V battery
- Configuration through wireless and UART interface
- Fully functional software for sensor telemetry with programmable configurations
- Integrated antenna, frequency reference, and low-frequency clock
- Ultra low power operation, providing 3-year battery life
- Ad-hoc and infrastructure modes for maximum deployment flexibility

Applications

- Wireless sensor networks
- Machine-to-machine communications
- Point of Sale Terminals
- Metering (Parking Meters, Utility Meters etc.)
- Warehousing
- Security Cameras & Surveillance Equipment
- Logistics and Freight Management
- Medical Applications including Patient Monitoring, Remote Diagnostics etc.

Specifications

Network Standard Support	IEEE 802.11b/g/i, draft 802.11 n/k/r
Data Rates	802.11n: 6.5, 13, 19.5, 26, 39, 52, 58.5, 65 Mbps 802.11g: 6, 9, 12, 18, 24, 36, 48, 54 Mbps 802.11b: 1, 2, 5.5, 11 Mbps
Modulation Techniques	OFDM with BPSK, QPSK, 16-QAM, and 64-QAM 802.11b with CCK and DSSS
QoS	WMM and WMM Power Save Support
Wireless Security	802.11i: AES, TKIP, WEP, WPA, WPA2
802.11n Features	MCS 0-7, STBC, RIFS,Greenfield Protection, A-MPDU, A-MSDU Aggregation with Block-ack, PSMP, MTBA
Network Protocols	TCP, HTTP , ARP, UDP, IPv6
WLAN Functions	Power save modes, automatic roaming, Ad-hoc and Infrastructure modes
Sensor Interfaces	10-channel ADC, I2C, SPI, push-button, current sense
Debug Interface	JTAG
Supply Voltage	2.4 - 3.6 V battery
Package	LGA, 31mm x 44mm
Operating Temperature	Industrial Grade -40ºC to +85ºC

Evaluation Package

Redpine Signals provides a comprehensive evaluation package that includes a board with the module mounted on it, along with standard serial connector, a selection of sensors including pressure, temperature, and motion detection. It also includes a Windows XP based GUI based configuration utility and software upgrade capability, along with detailed documentation.

RS9110-N-11-31 WLAN SYSTEM DIAGRAM

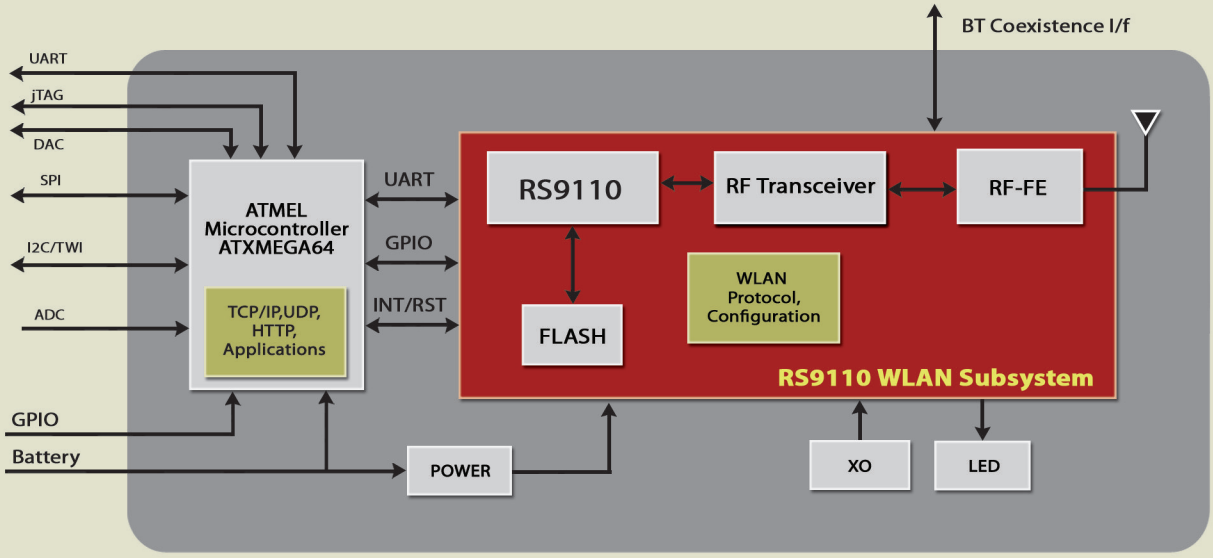

RS9110-N-11-31

For additional information, please contact Sales at Redpine Signals, Inc.:

Redpine Signals, Inc. • 2107 North First Street • Suite 680 • San Jose, CA 95131
Phone: +1 408 748 3385 • Email: sales@redpinesignals.com

www.redpinesignals.com

Ultra Low Power Wi-Fi®

Redpine Signals, Inc. reserves the right to make changes to the product(s) or information contained herein without notice. No Liability is assumed as a result of their use or application.Redpine, Redpine Signals, the Redpine logo, Expanding Wireless Horizons and Lite-Fi are trademarks of Redpine Signals,Inc. All other company names, products and logos are registered trademarks of their respective companies.

© Copyright 2008 Redpine Signals, Inc. All Rights Reserved